Chapter 21 – Modulation Methods

John Brock ZS6WL 2020-08-25

Modulation Methods

A continous carrier by itself carries no information... **N0N** [That should be a ‘slashed’ zero!]

In the beginning there was CW, or Morse...

THIS IS 100% AMPLITUDE MODULATION!

The “modulation” or information is very slow...Bandwidth is low – in fact the slower the morse, the less bandwidth required... **A1A**

Then someone figured out how to use a valve as a **Modulator** or **Mixer**...
Amplitude Modulation was born. Voice and later music was transmitted on the air...

Then someone figured out that if you modulated the frequency or phase, you could ‘limit’ the amplitude changes. Because of this, “HiFi” was born.

Bandwidth Requirements

Morse –	100 Hertz
AM Voice –	300-3300 Hertz
AM Music –	50 – 4500 Hertz
FM Voice -	300-3300 Hertz
FM Music -	20 – 20000 Hertz

Modulation Methods

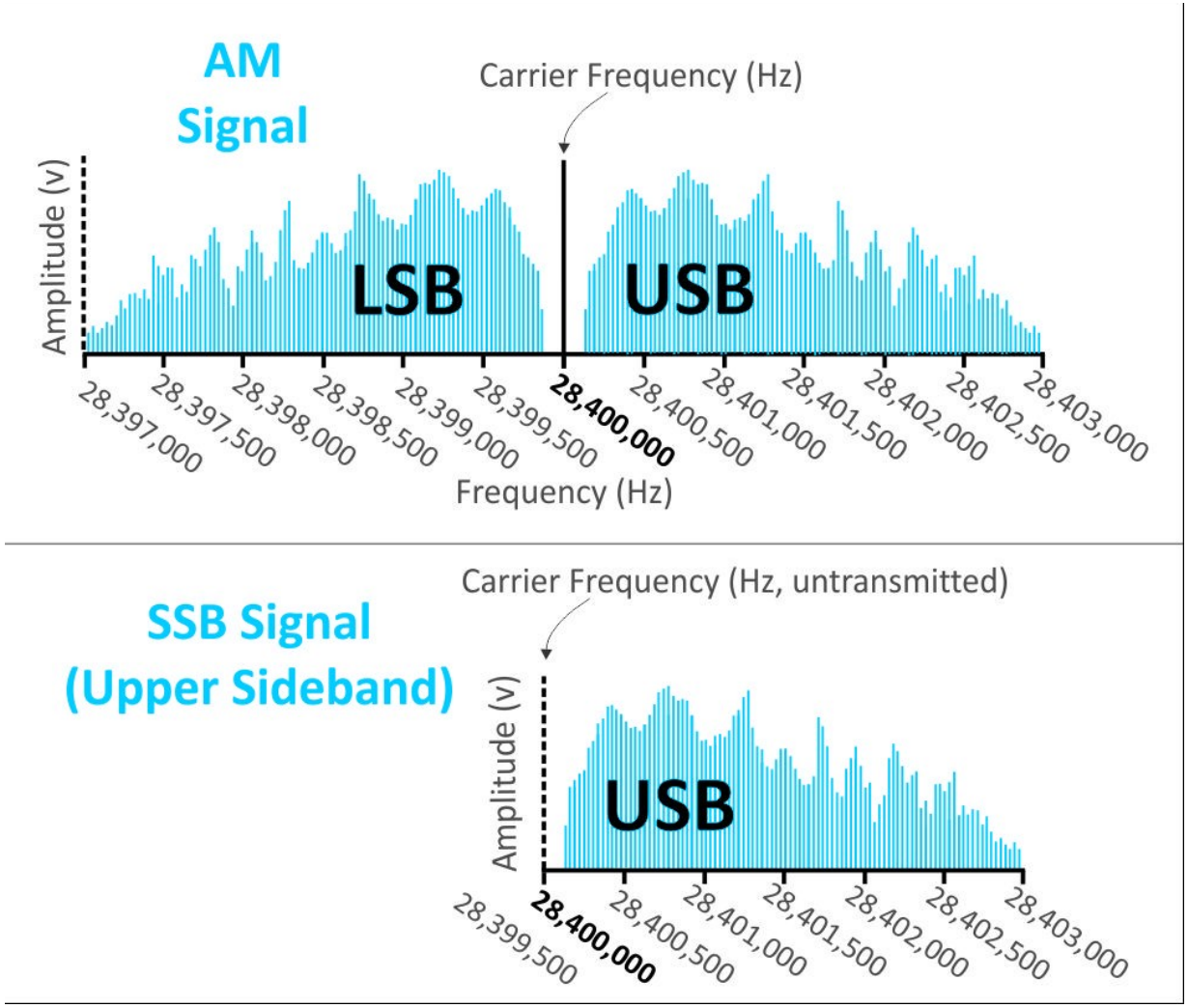

https://en.wikipedia.org/wiki/Types_of_radio_emissions

Modulation Methods

No	Mode	Explanation	Comment (by Editor)
1	A1A	Telegraphy without the use of a modulating audio frequency (by on/off keying) for aural reception.	CW.
2	A3C	Facsimile (with modulation) of the main carrier either directly or by frequency-modulated subcarrier.	Fax via SSB.
3	A3E	Double-sided telephony.	DSB (really).
4	C3F	Television by analogue modulation and vestigial-sideband operation	FSTV.
5	F1A	Telegraphy for aural reception is including DATA by means of frequency-shift keying without the use of a modulating audio frequency whereby one or two frequencies are being emitted at any instant.	
6	F1B	Telegraphy is including DATA by means of frequency-shift keying without the use of a modulating audio frequency whereby one or two frequencies are being transmitted at any instant.	RTTY.
7	F1D	Data transmissions by means of frequency-shift keying without the use of a modulating audio frequency, with one frequency been emitted at any instant.	
8	F2A	Telegraphy for aural reception including RTTY and DATA by the on/off keying of a frequency or by means of the on/off keying of a frequency modulated emission.	Practice Morse by FM.
9	F2B	Telegraphy including RTTY and DATA by the on/off keying of frequency modulating audio frequency or by means of the on/off keying of a frequency modulated emission.	
10	F3C	Facsimile by direct frequency modulation of the carrier.	Fax via FM.
11	F3E	Frequency-modulated telephony.	FM.
12	G3E	Phase-modulated telephony.	PM.
13	J3E	Single, sideband-suppressed carrier telephony.	SSB.
14	J3F	Single, sideband-suppressed carrier, modulated by slow scan television audio frequencies.	SSTV.
15	Non	Emission of an unmodulated carrier.	Should be N0N.
16	R3E	Single, sideband, reduced or variable level carrier telephony.	
17	W9E	Digital speech multiplexed up to eight channels.	
18	J2D	Data transmission with the use of a modulating auto frequency.	
19	J2E	Digital telephony with the use of a modulating audio frequency.	

What!?

Where is AM?
A3E... not just Double Side Band

PSK?
BPSK?

J2B - Phase-shift keying such as PSK31 (BPSK31)

N0N Continuous, unmodulated carrier, formerly common for radio direction finding (RDF) in marine and aeronautical navigation.

Modulation Methods

- CW A1A mode
- AM A3E mode
- DSBSC R3E mode
- SSB J3E mode
- FM (PM) F3E mode
- FSK F1D mode
- PSK J2B mode
- QPSK J2B mode
- TV C3F mode

The FCC recently changed the mode description to a longer description...
We in SA will catch up eventually.

Continuous Wave (CW)

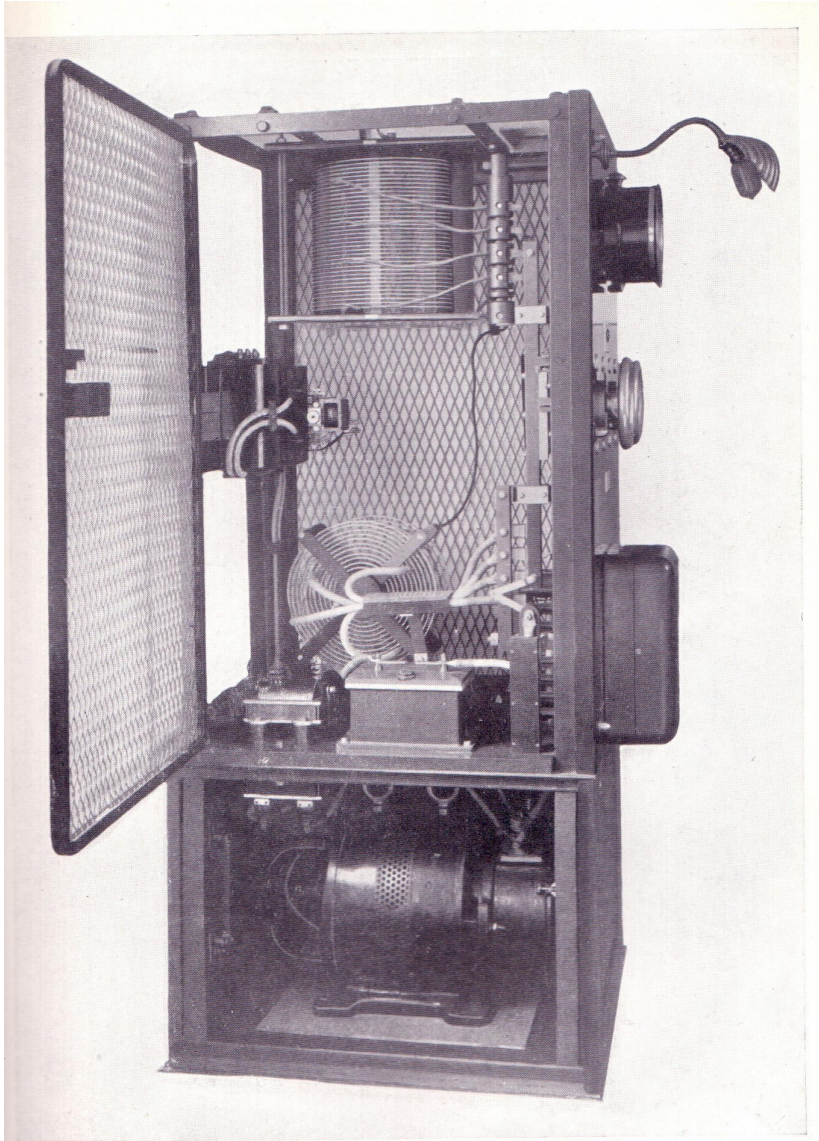

SPARK TRANSMITTER: $1\frac{1}{2}$ kW (p. 116).
(Radio Communication Co., Ltd.)

Spark Gap transmitters used a motor to sustain the oscillation at the transmit frequency...

This is **A1A**, the ‘buzz’ carries the modulation/information.

AM - Amplitude Modulation

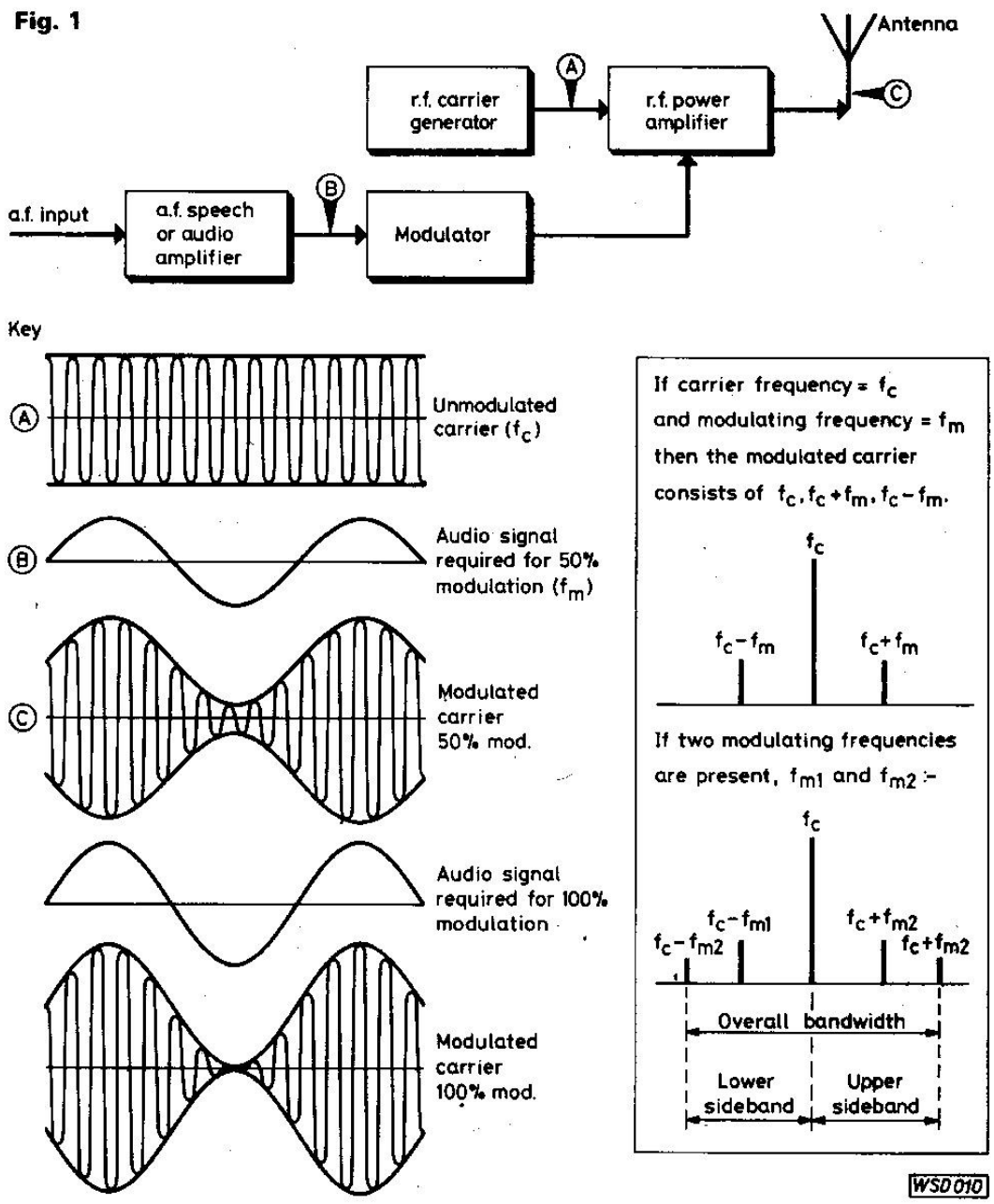

AM Modulation

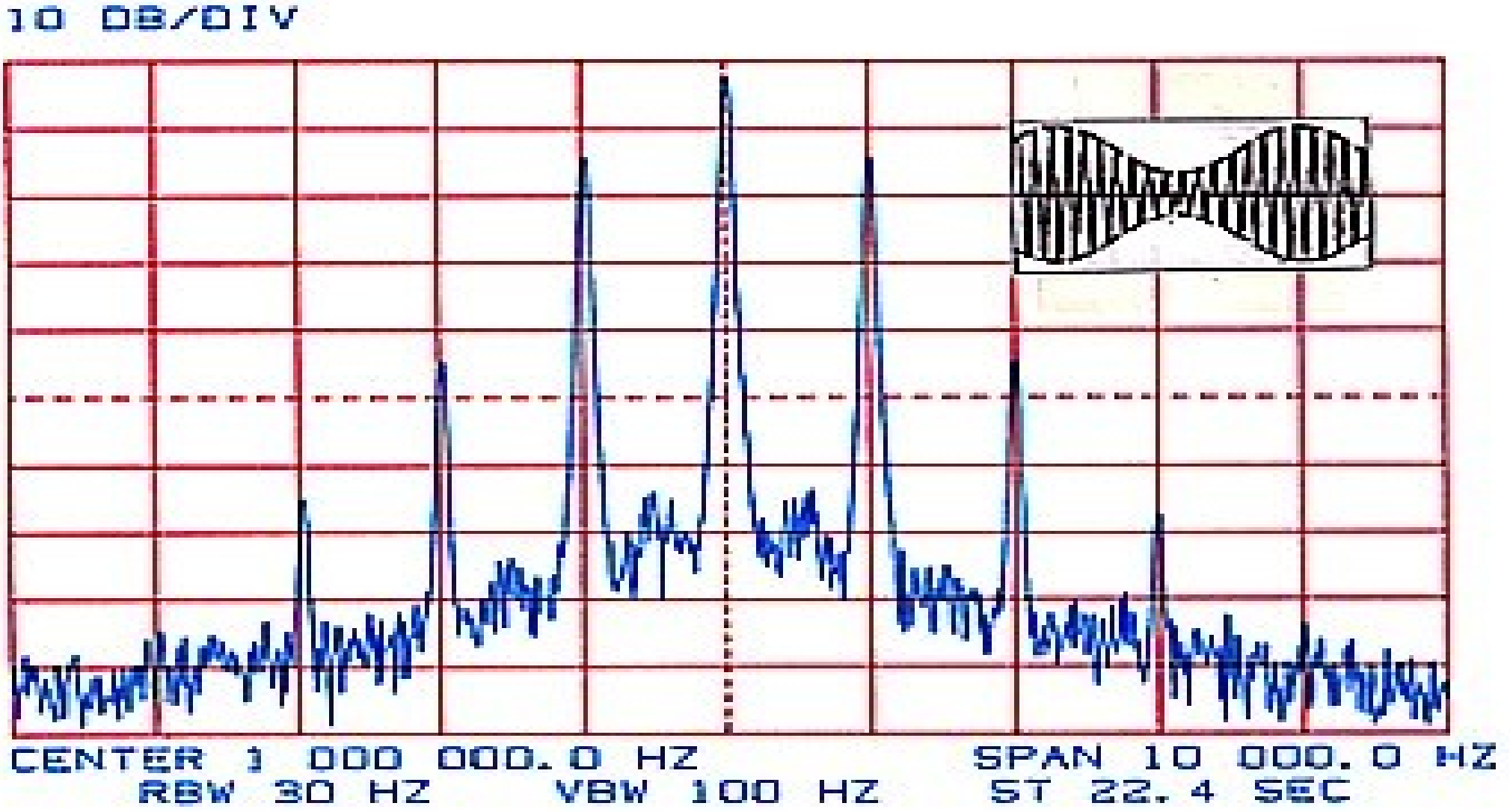

AM ‘Overmodulation’

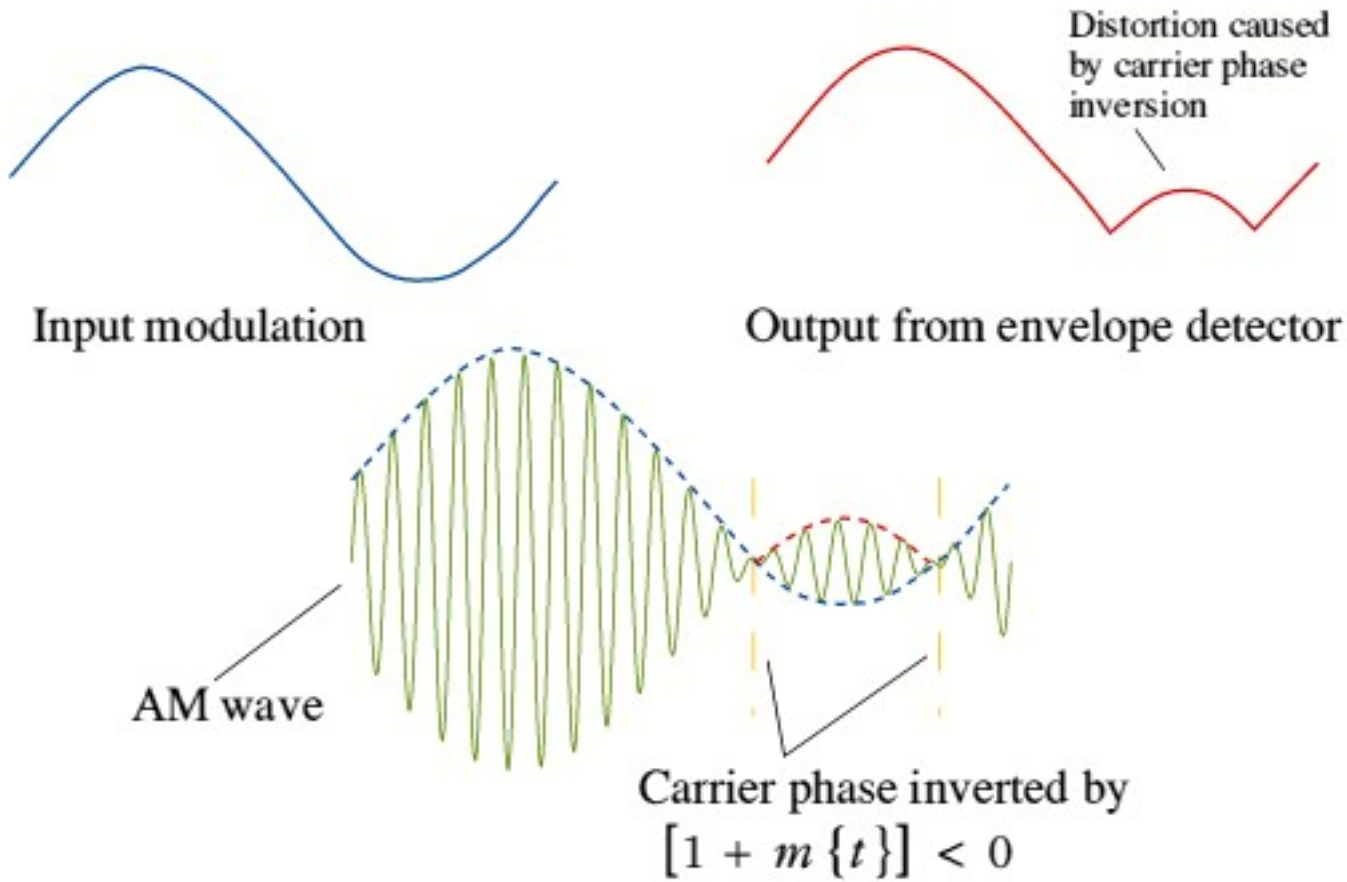

AM and FM

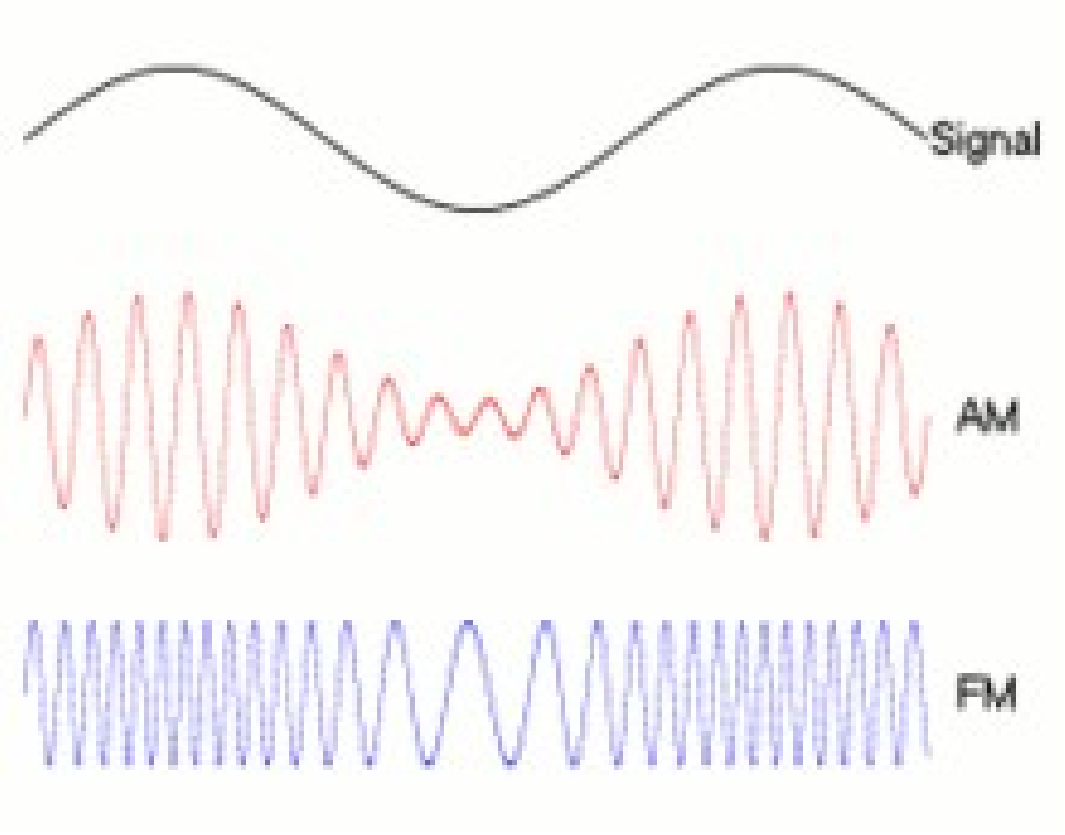

Modulation - usually audio frequency.

AM - raises and lowers the amplitude of the carrier in sympathy with the modulation.

FM - moves the frequency upwards and downwards in sympathy with the modulation.

FM – The ‘BIG’ advantage

- The receiver can eliminate any amplitude changes of the received carrier.
- The AM receiver cannot and produces pulsed outputs when receiving impulsive interference.
- FM is basically the same as Phase Modulation.
- It can be passed through a ‘multiplier’ to increase deviation.

FM (and AM) Transmitter

- do NOT use this circuit!

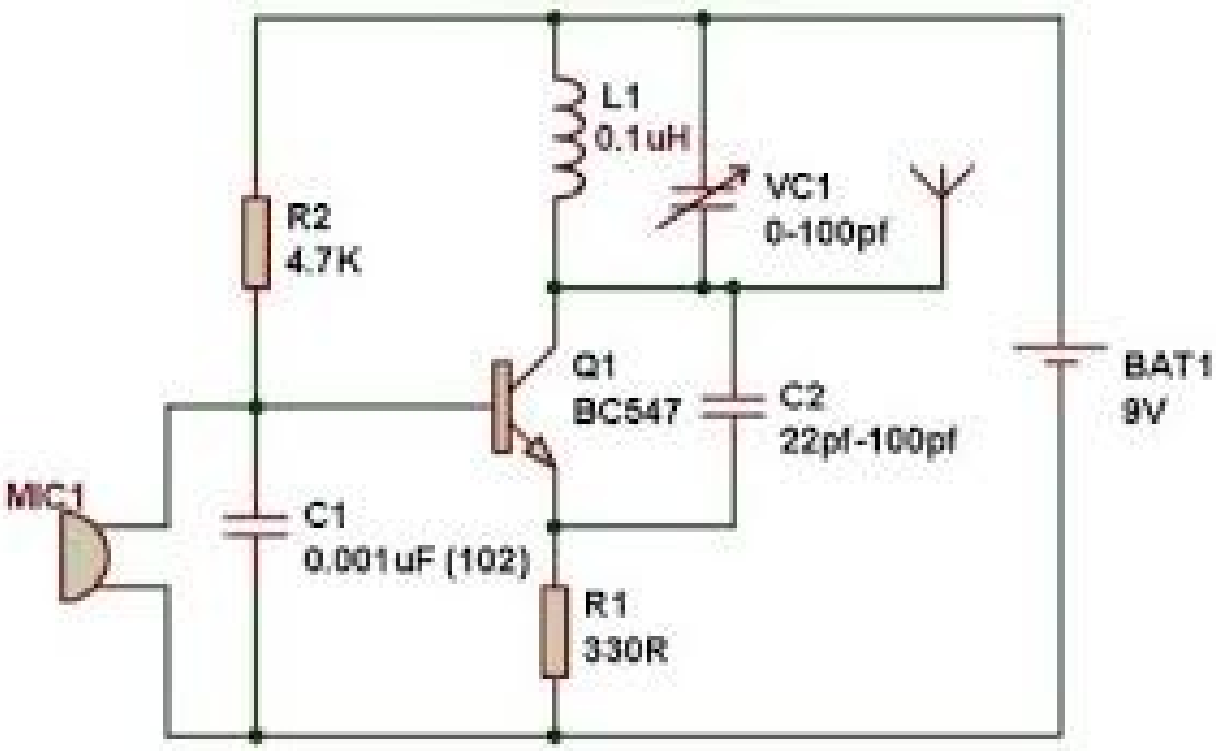

How do you set the deviation?

How do you set the output transmit frequency? (VC1)

What about the harmonics?

How does it work?

An AM 2 metre Transmitter

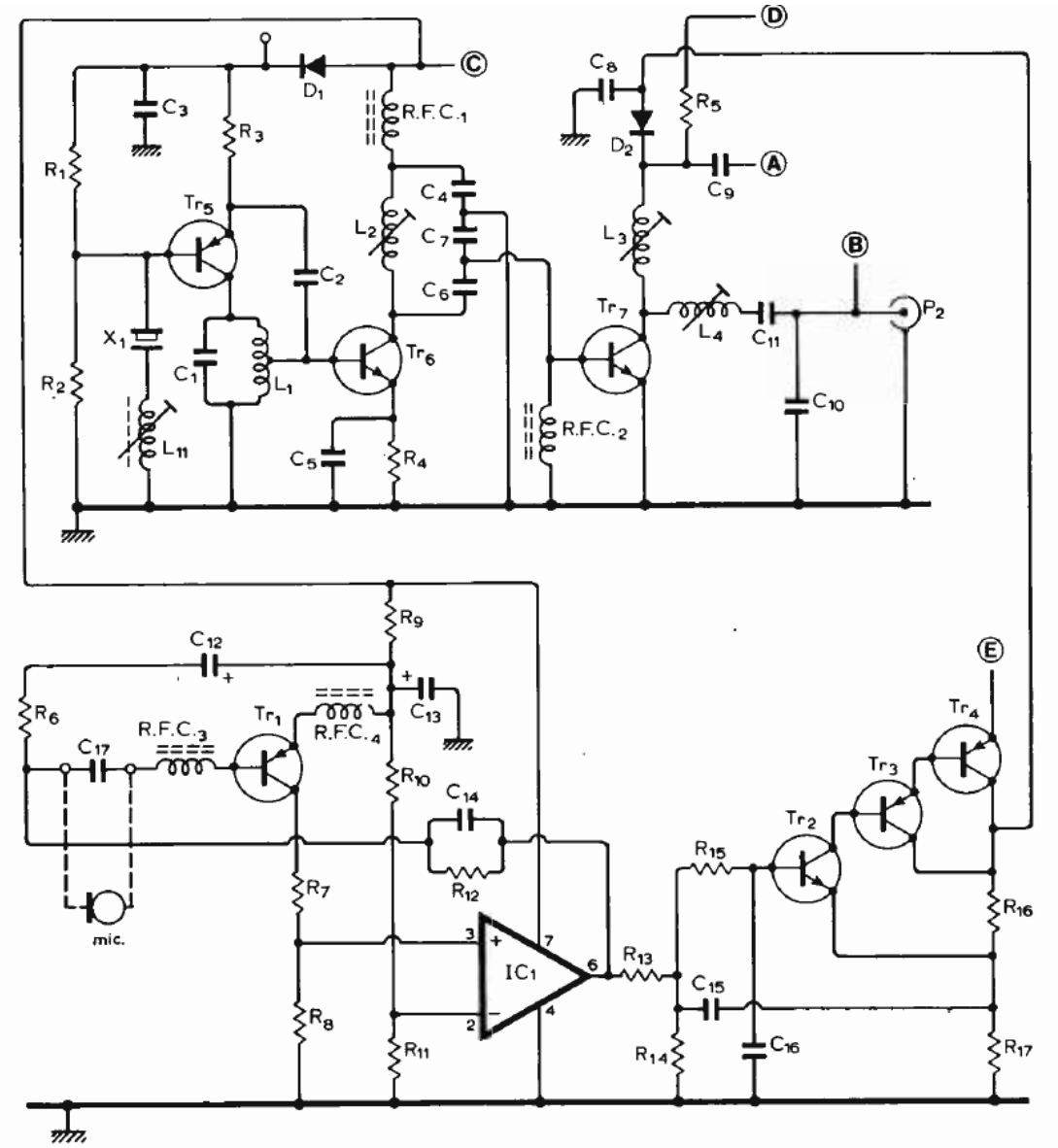

Fig. 1. Circuit of transmitter and modulator. Points labelled A, B, C, D, E refer to corresponding points in Fig. 3.

Not so long ago when transistors were new...

AM on two metres was the ONLY way to go.

Crystal oscillator driving a multiplier stage. Driving a class C output stage. P2 is connected to the aerial.

Audio from microphone is amplified with operational amplifier feeding into a series pass transistors, Tr3 and Tr4. This “modulates” the power supply to the class C output stage.

PSK31 and QPSK

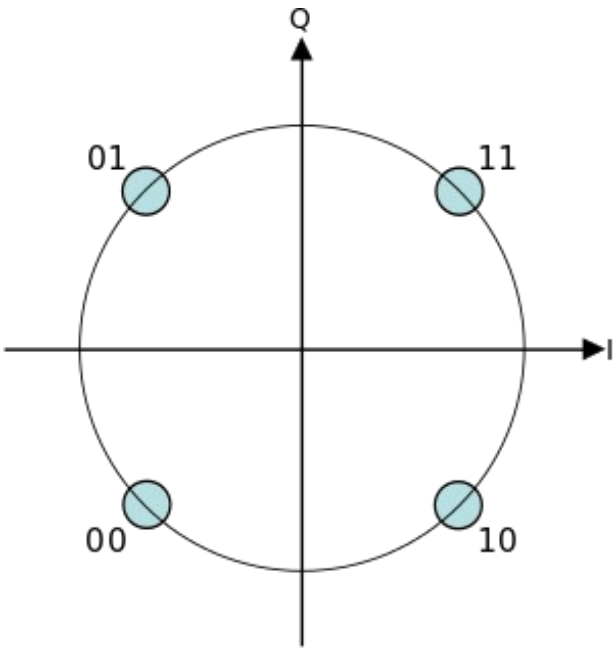

PSK31 -->

Yes there are other types of ‘digital modulation’, but these are the main ones.

Summary 1

In **amplitude modulation** (AM), the amplitude of an RF carrier is varied according to the amplitude of the modulating signal. The resulting AM signal consists of the **carrier**, the **upper sideband** (at a higher frequency than the carrier) and the **lower sideband** (at a lower frequency than the carrier). The **carrier takes two thirds** of the power of an AM signal, with the remaining one-third of the power being shared equally between the upper and lower sidebands. Although AM signals are easy to demodulate using a **half-wave rectifier** and lowpass filter, they are inefficient both in terms of power (because the carrier conveys no information but takes 2/3 of the power) and **bandwidth** (since the modulating information is replicated in both sidebands).

Modulating signals are referred to baseband signals, and are generally found at low frequencies near DC (or 0 Hz).

A **double-sideband suppressed-carrier** signal is similar to an AM signal but **without the carrier**. It can be generated using a **balanced modulator**. The resulting signal is more power-efficient than an AM signal, but still uses twice the bandwidth of the modulating signal.

In a **single-sideband suppressed-carrier** (single sideband, or **SSB**) signal, the carrier and one sideband have been removed, leaving only a single sideband. SSB signals may be upper sideband (USB) or lower sideband (LSB). In **LSB** signals the spectrum of the modulating signal is **inverted** in the modulated signal; in **USB**, the spectrum is simply translated to a different frequency but is **not inverted**.

SSB is one of the most efficient means of **voice** communications, especially when signal strengths are low.

Summary 2

Continuous Wave (CW) transmission consists of turning the carrier frequency on or off, and is used to send information in **Morse** code. CW is effectively a type of amplitude modulation, and the keying sidebands are known as “key clicks”. Their extent and strength can be reduced by turning the carrier on and off more gradually, over a period of about 5 ms.

In **frequency modulation (FM)** the frequency of the carrier is varied according to the amplitude of the modulating signal while the amplitude remains constant. FM signals are capable of very good audio quality provided the received signal is fairly strong, but quality deteriorates rapidly as the received signal strength weakens. Narrowband FM transmissions by amateurs usually have a **deviation of 2.5 kHz**, resulting in a **bandwidth** of 5 to 6 kHz, which is similar to that of an AM transmission.

Frequency-shift keying (FSK) and **phase-shift keying (PSK)** are used to transmit digital information. In FSK, one of two frequencies is transmitted depending on whether a one or a zero is being sent; while in PSK the phase of the transmitted signal is varied to indicate that a one or a zero is being sent. FSK is used by modes like RTTY and Packet, while PSK is used by PSK-31. The WSJT suite is increasingly being used for weak-signal communications.

Forward Error Correction (FEC) and retransmission protocols introduce redundancy to detect and possibly correct errors in received data. Error-free data transmission can result, albeit at the expense of lower throughput.

The End

Of tonight’s presentations.

Next week we will present ‘Receiver Fundamentals’ and the ‘SuperHeterodyne’.